TULEJE PROWADZĄCE
GUIDE BUSHES

B10M

Materiał / *Material*

1.7131

Twardość / *Hardness*

61 ÷ 63 HRC

Jak zamówić / *How to order*

Symbol: **B10M4086**

Inne wymiary na żądanie
Other dimensions on demand

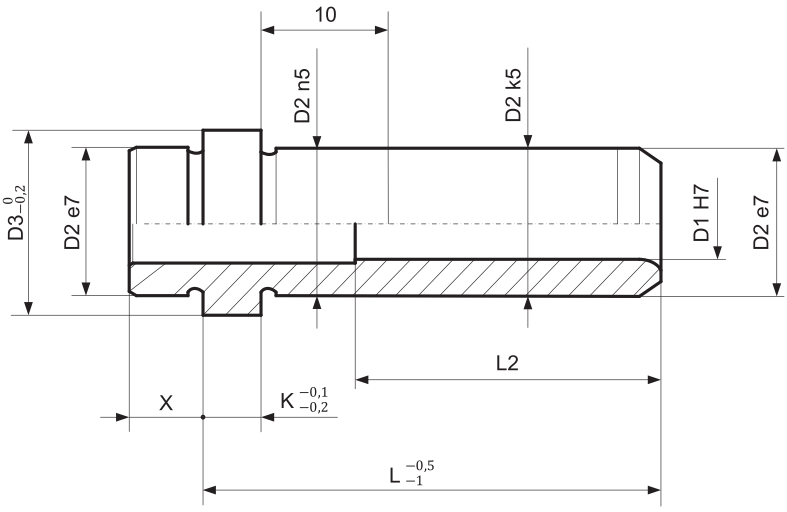

Symbol	D1	Symbol	D1	L	L2	D2	D3	K	X
B10M1417		B10M1517		17					
B10M1422		B10M1522		22					
B10M1427		B10M1527		27	-				
B10M1436		B10M1536		36					
B10M1446	14	B10M1546	15	46		20	25	6	9
B10M1456		B10M1556		56					
B10M1466		B10M1566		66					
B10M1476		B10M1576		76	46				
B10M1486		B10M1586		86					
B10M1496		B10M1596		96					
B10M1817		B10M2017		17					
B10M1822		B10M2022		22					
B10M1827		B10M2027		27	-				
B10M1836		B10M2036		36					
B10M1846		B10M2046		46					
B10M1856	18	B10M2056	20	56		26	31	6	9
B10M1866		B10M2066		66					
B10M1876		B10M2076		76					
B10M1886		B10M2086		86	56				
B10M1896		B10M2096		96					
B10M18116		B10M20116		116					
B10M2222		B10M2422		22					
B10M2227		B10M2427		27					
B10M2236		B10M2436		36					
B10M2246		B10M2446		46	-				
B10M2256		B10M2456		56					
B10M2266	22	B10M2466	24	66		30	35	6	9
B10M2276		B10M2476		76					
B10M2286		B10M2486		86					
B10M2296		B10M2496		96	76				
B10M22116		B10M24116		116					
B10M22136		B10M24136		136					

Symbol	D1	Symbol	D1	L	L2	D2	D3	K	X
B10M3027		B10M3227		27					
B10M3036		B10M3236		36					
B10M3046		B10M3246		46					
B10M3056		B10M3256		56	-				
B10M3066		B10M3266		66					
B10M3076	30	B10M3276	32	76		42	47	6	9
B10M3086		B10M3286		86					
B10M3096		B10M3296		96					
B10M30116		B10M32116		116					
B10M30136		B10M32136		136	96				
B10M30156		B10M32156		156					
B10M4036		B10M4236		36					
B10M4046		B10M4246		46					
B10M4056		B10M4256		56					
B10M4066		B10M4266		66	-				
B10M4076		B10M4276		76					
B10M4086	40	B10M4286	42	86		54	59	10	12
B10M4096		B10M4296		96					
B10M40116		B10M42116		116					
B10M40136		B10M42136		136					
B10M40156		B10M42156		156	116				
B10M40196		B10M42196		196					

We reverse the right to make modification in our catalogue, without prior notice, always check its validity on of website www.impex-ready.pl