TULEJE PROWADZĄCE SAMOSMARUJĄCE
SELF-LUBRICATING GUIDE BUSHES

BG06

Materiał / *Material*

BRĄZ + GRAFIT
BRONZE + GRAPHITE
HB > 190

Twardość / *Hardness*

Symbol: **BG06.020036**

Jak zamówić / *How to order*

Inne wymiary na żądanie
Other dimensions on demand

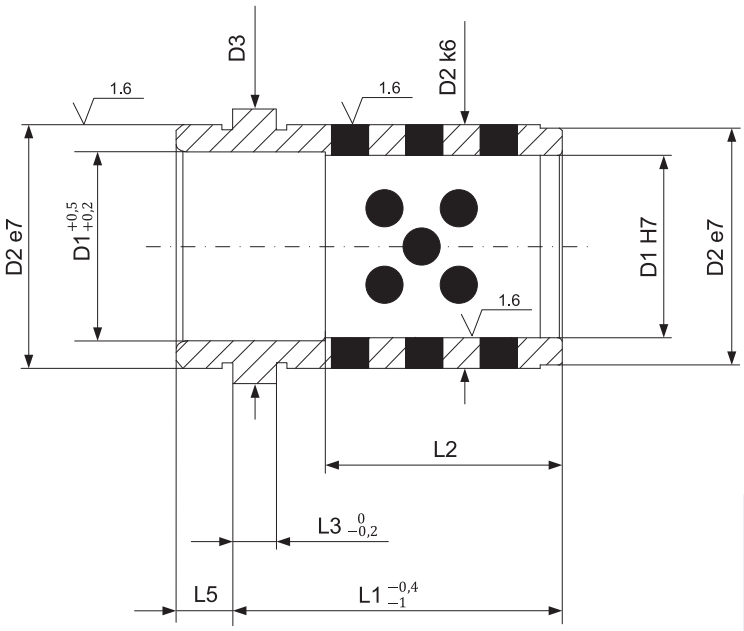

Symbol	D1	Symbol	D1	L1	D2	D3	L2	L3	L5
BG06.009012		BG06.010012		12					
BG06.009017		BG06.010017		17					
BG06.009022		BG06.010022		22			-		
BG06.009027	9	BG06.010027	10	27	14	16		3	3
BG06.009036		BG06.010036		36					
BG06.009046		BG06.010046		46			22		
BG06.009056		BG06.010056		56					
BG06.014017		BG06.015017		17					
BG06.014022		BG06.015022		22			-		
BG06.014027		BG06.015027		27					
BG06.014036	14	BG06.015036	15	36	20	25		6	6
BG06.014046		BG06.015046		46			30		
BG06.014056		BG06.015056		56					
BG06.014066		BG06.015066		66					
BG06.014076		BG06.015076		76					
BG06.018017		BG06.020017		17					
BG06.018022		BG06.020022		22			-		
BG06.018027		BG06.020027		27					
BG06.018036		BG06.020036		36					
BG06.018046	18	BG06.020046	20	46	26	31		6	8
BG06.018056		BG06.020056		56					
BG06.018066		BG06.020066		66			40		
BG06.018076		BG06.020076		76					
BG06.018086		BG06.020086		86					
BG06.018096		BG06.020096		96					
BG06.022022		BG06.024022		22					
BG06.022027		BG06.024027		27			-		
BG06.022036		BG06.024036		36					
BG06.022046		BG06.024046		46					
BG06.022056	22	BG06.024056	24	56	30	35		6	8
BG06.022066		BG06.024066		66					
BG06.022076		BG06.024076		76			48		
BG06.022086		BG06.024086		86					
BG06.022096		BG06.024096		96					
BG06.022116		BG06.024116		116					

SYMBOL	D1	SYMBOL	D1	L1	D2	D3	L2	L3	L5
BG06.030027		BG06.032027		27					
BG06.030036		BG06.032036		36					
BG06.030046		BG06.032046		46			-		
BG06.030056		BG06.032056		56					
BG06.030066		BG06.032066		66					
BG06.030076	30	BG06.032076	32	76	42	47		6	8
BG06.030086		BG06.032086		86					
BG06.030096		BG06.032096		96			64		
BG06.030116		BG06.032116		116					
BG06.030136		BG06.032136		136					
BG06.030156		BG06.032156		156					
BG06.040036		BG06.042036		36					
BG06.040046		BG06.042046		46					
BG06.040056		BG06.042056		56			-		
BG06.040066		BG06.042066		66					
BG06.040076		BG06.042076		76					
BG06.040086	40	BG06.042086	42	86	54	54		10	10
BG06.040096		BG06.042096		96					
BG06.040116		BG06.042116		116					
BG06.040136		BG06.042136		136			84		
BG06.040156		BG06.042156		156					
BG06.040176		BG06.042176		176					
BG06.040196		BG06.042196		196					

We reserve the right to make modification in our catalogue, without prior notice, always check its validity on of website www.impex-ready.pl